EXPERIMENT No. :-

A study of cathode ray Oscilloscope

AIM: A study of cathode ray Oscilloscope: Measurement of AC voltage, and measurement of frequency of AC signals by direct method and by Lissajou's method

APPARATUS: Cathode ray oscilloscope (10MHz), signal generators, AC power supply.

FORMULA:

i) $V_p = V_{p-p}/2$
$V_{rms} = 0.707\ V_p$
$V_{ave} = 0.636\ V_p$

ii) Frequency $F = 1/T$ KHz

iii) Frequency $F_Y = (T_X / T_Y) \times F_X$

Where p-p is vertical length of the wave from the negative maximum to the positive maximum
Vp-p is obtained by multiplying p-p vertical length by position of Volt/Div
Vp is the peak voltage
T is the time period obtained by multiplying length of one cycle by the time base setting
T_X is number of tangency points along X-axis
T_Y is number of tangency points along Y-axis.
F_X is the frequency of signal generator applied to X-input.
F_Y is the unknown frequency applied to Y-input.

CIRCUIT DIAGRAM

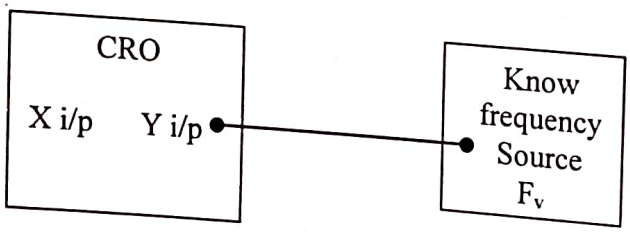

Fig. 1: Voltage Measurement and Frequency Measurement

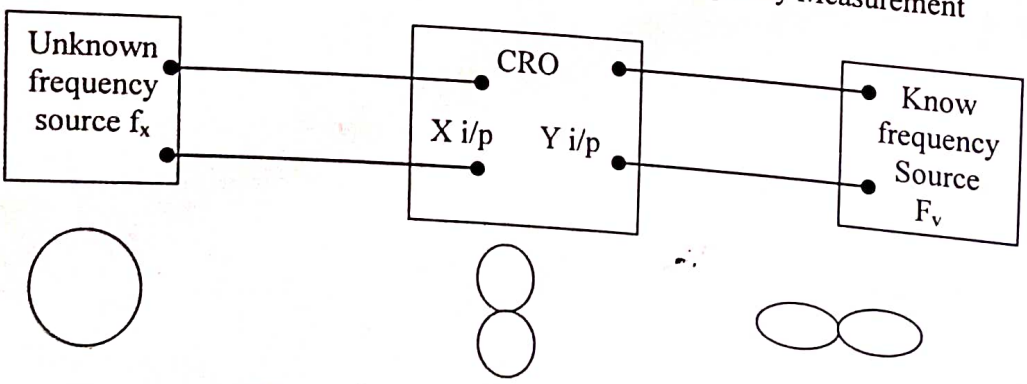

Fig. 2: Frequency Measurement by Lissajou's method

EXPERIMENT No. :-
A study of cathode ray Oscilloscope

AIM: A study of cathode ray Oscilloscope: Measurement of AC voltage, and measurement of frequency of AC signals by direct method and by Lissajous method

APPARATUS: Cathode ray oscilloscope (10MHz), signal generators, AC power supply.

FORMULA:

i) $V_p = V_{p-p}/2$
$V_{rms} = 0.707\ V_p$
$V_{ave} = 0.636\ V_p$

ii) Frequency $F = 1/T$ KHz

iii) Frequency $F_Y = (T_X / T_Y) \times F_X$

Where p-p is vertical length of the wave from the negative maximum to the positive maximum
Vp-p is obtained by multiplying p-p verticle length by position of Volt/Div
Vp is the peak voltage
T is the time period obtained by multiplying length of one cycle by the time base setting
T_X is number of tangency points along X-axis
T_Y is number of tangency points along Y-axis.
F_X is the frequency of signal generator applied to X-input.
F_Y is the unknown frequency applied to Y-input.

PROCEDURE:

A) ***Measurement of AC voltage***

1) The coupling switch is kept in AC position. The sine wave output of the function generator is connected to Y-input of CRO, as shown in fig.1 by adjusting the vertical amplifier sensitivity. The wave size on the screen is adjusted to get a sufficiently large display and without going beyond the limit of the screen.

2) The vertical length of the wave from the negative maximum to the positive maximum is read on the graticule. It is multiplied by the sensitivity to give the voltage Vp-p dividing it by the value of '2' Vp is obtained. From it, the value of rms voltage and average voltage are determined with the help of following formulae.

$V_p = V_{p-p}/2$
$V_{rms} = 0.707\ V_p$
$V_{avg} = 0.636\ V_p$

3) The measurements are repeated with signal of different amplitude and frequencies. The measurements are recorded in TABLE-I.

OBSERVATION :

TABLE-I

Measurement of AC Voltage

S.N.	Position of vertical Amp. Volts/div	Peak to peak length (cm)	Vp-p Volts	Vp = Vp-p/2 (volts)	Vavg Volts	Vrms Volts
	1	2	3	4	5	6
			= 1×2	=3/2	0.636×4	0.707×4
1.	2	3.6	7.2	3.6	2.29 V	2.55 volt
2.						
3.						

TABLE-II

Measurement of Frequency

S.N.	Time Base Sensitivity (a) ms/cm	No. of Horizontal Divisions (b)	Period, T sec T=(a) × (b)	Frequency, f Hz $f=\frac{1}{T}$	Frequency on AFO dial Hz
1.	$5 ms \times 10^{-3}$	2.8	14 ms	0.071×10^{3} Hz	100 Hz
2.					
3.					

TABLE – III

Measurement of Frequency by Lissajou's Method

S. No.	Frequency of signal generator F_X in Hz	Tangency points along x-axis T_X	Tangency points along y-axis T_Y	$F_Y = (T_X/T_Y) \times F_X$ in Hz	Mean F_Y in Hz
1.					
2.					
3.					

B) *Measurement of Frequency of AC signals.*

1) The function generator is set to 1KHz frequency. The time base control is suitably adjusted so as to get about 2 to 3 cycles of the signal displayed on the screen. The length of one cycle on the graticule is read. It is multiplied by the time base setting to obtain the time period of the signal.

2) Form the time period the frequency is determined. The measurements are repeated with different time base setting. The measurements are recorded in TABLE-II.

C) *Measurement Of unknown Frequency:*

1) For measurement of unknown frequency of an A.C. signal make the connections as shown in Fig.2. Press XY push button. The resultant pattern produced on C.R.O. screen will be a Lissajous pattern. Adjust the frequency of signal generator to get a stable Lissajous pattern.

2) Record the number of tangency points along X-axis and Y-axis for this frequency of signal generator and using the formula calculate the unknown frequency of an A.C. signal.

3) Repeat the above procedure for various frequencies of signal generator. Take at least two readings. The measurements are recorded in TABLE-III.

RESULT:

1) CRO was studied successfully.
2) AC voltages voltage have been measured using CRO
3) The frequency measurement was done by direct method using CRO.
4) The frequency measurement was done by lissajou's method using CRO.

PRECAUTIONS:

1) Avoid using the oscilloscope in high ambient conditions.
2) Select a location free from high temperature and humidity. Do not use the oscilloscope in a dusty location.
3) Do not operate the oscilloscope in a place where mechanical vibrations are excessive or a place, which generate strong magnetic fields or impulse voltages.
4) Do not apply input voltages exceeding the maximum ratings.
5) Do not increase the brightness of the CRT unnecessarily.
6) The trigger mode should always be on auto level.
7) The variable knob should be on CAL position.

VIVA QUESTIONS:

1. What are the basic units of CRO?
2. What is the difference between CRO & CRT?
3. What is the function of V/div or sensitivity control knob?
4. What is (i) peak voltage (ii) r.m.s. voltage (iii) average voltage?
5. How intensity of the spot is adjusted on the screen?

Date of performance Signature of Teacher